Lamella Mixer

Introduction

At the macroscopic level, systems usually mix fluids using mechanical actuators or turbulent 3D flow. At the microscale level, however, neither of these approaches is practical or even possible. This model demonstrates the mixing of fluids using laminar-layered flow in a MEMS mixer.

To characterize the fluid flow's turbulent behavior scientists generally use the Reynolds number

$$\mathrm{Re} = \frac{\rho u L}{\eta}$$

where ρ is the fluid density, u is flow velocity, L is a characteristic length, and η is the fluid's dynamic viscosity. Turbulent flow takes place when the Reynolds number is high, typically when $\mathrm{Re} > 2000$. At MEMS scales, the width of a channel is in the range of $100\ \mu\mathrm{m}$ and the velocity is approximately $1\ \mathrm{cm/s}$. In this case, for water-like substances Re is close to unity. The fluid flow is thus clearly laminar, so effective mixing of fluids in MEMS devices requires other means.

Figure 1 shows a section of a component that uses layered flow to improve mixing. The mixer has several lamellae of microchannels, and the two fluids being mixed are alternated for every second layer. Pressure forces the fluid to travels in the channels from back to front. The fluid enters a larger space, the mixing chamber (visible at the front of the image). The figure does not include this chamber, but it covers the area beyond where the grid of the microchannel ends. Near the ends of the microchannels the mixing chamber has distinct lamellae of the two fluids, but this separation vanishes towards the end of the chamber.

©2012 COMSOL

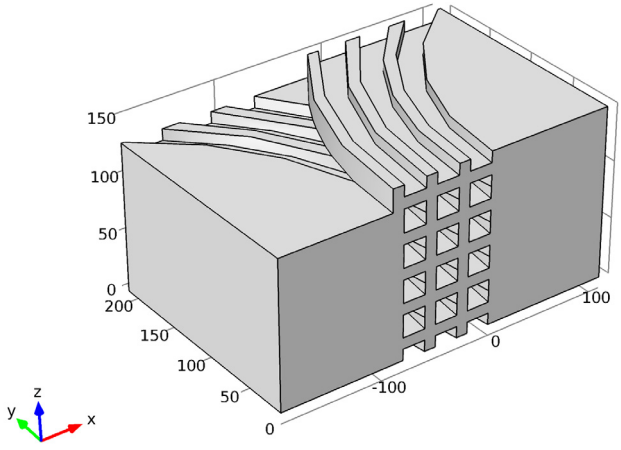

Figure 1: Geometry of a lamella mixer (mixing chamber not visible).

Model Definition

This model analyzes the steady-state condition of the fluid flow as well as the convection and diffusion of a dissolved substance in a lamella mixer. The geometry in Figure 2 corresponds to Figure 1 except it includes only a small vertical section of the mixer with a height of 30 µm. The model starts from a plane in the middle of the channel bending to the left and ends at a plane in the middle of the channel bending to the right.

Each microchannel in the mixer has a quadratic cross section with a side of 20 µm. Because of the chosen geometry, microchannel height in the model is only 10 µm. The fluid exiting the microchannels enters a mixing chamber of length is 200 µm and width 80 µm.

 ©2012 COMSOL

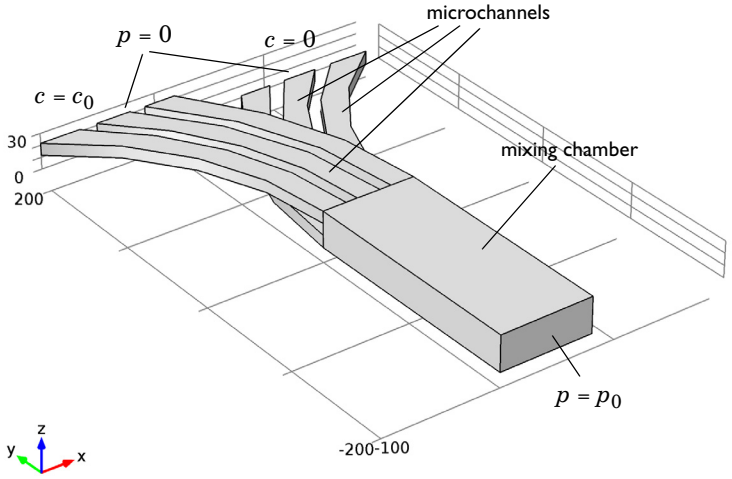

Figure 2: The model geometry for a lamella mixer takes advantage of symmetry so it is not necessary to model the entire height of the device.

You solve the fluid flow in the channels and in the chamber with the incompressible Navier-Stokes equations

$$\rho\frac{\partial \mathbf{u}}{\partial t} - \nabla \cdot [-p\mathbf{I} + \eta(\nabla \mathbf{u} + (\nabla \mathbf{u})^T)] + \rho \mathbf{u} \cdot \nabla \mathbf{u} = \mathbf{F}$$
$$-\nabla \cdot \mathbf{u} = 0 \qquad (1)$$

where ρ is fluid density, $\mathbf{u} = (u, v, w)$ is the flow-velocity field, p is fluid pressure, $\mathbf{I}$ is the unit diagonal matrix, η is the fluid's dynamic viscosity, and $\mathbf{F} = (f_x, f_y, f_z)$ is a volume force affecting the fluid. The fluid is water with $\rho = 1000$ kg/m^3, $\eta = 0.001$ Pa·s, and $\mathbf{F} = \mathbf{0}$ because there are no volume forces.

The system applies a pressure of $p_0 = 10$ Pa on all six microchannel inputs to drive the flow through the mixing chamber to where there is zero pressure. At the chamber exit the flow velocity has components only in the normal direction of the boundary.

On the microchannel and mixing-chamber walls, the no-slip boundary condition applies. However, in the vertical direction, due to the geometry, you can use a symmetry boundary condition.

The following convection-diffusion equation describes the concentration of the dissolved substances in the fluid:

$$\frac{\partial c}{\partial t} + \nabla \cdot (-D\nabla c) = R - \mathbf{u} \cdot \nabla c \qquad (2)$$

where c is the concentration, D is the diffusion coefficient, and R is the reaction rate. In this model, $D = 10^{-10}$ m^2/s, and $R = 0$ because the concentration is not affected by any reactions.

There is a concentration of $c_0 = 50$ $\mathrm{mol}/\mathrm{m}^3$ on the input boundaries of the channels curving to the left, whereas the channels curving to the right have zero concentration. At the output boundary of the mixing chamber the substance flows through the boundary by convection. The walls of the channels and the chamber are insulated for this dissolved substance, and on the top and bottom boundaries you use a symmetry boundary condition.

Results and Discussion

Figure 3 details fluid flow in the mixer. You can see a gradual change in the velocity magnitude across the slices, indicating a laminar parabolic flow. The streamlines do not show swirls, and there are only small changes in the flow direction. The figure also shows that the maximum flow velocity in the microchannels is at the model's symmetry boundaries. Inside the mixing chamber, a flow velocity gradient is visible only along the x direction; the symmetry conditions on the top and bottom boundaries give a uniform velocity profile in the z direction.

The peak velocity is roughly 1.4 mm/s in the microchannels and 0.5 mm/s in the mixing chamber. Given the corresponding lengths (20 µm and 80 µm), the Reynolds numbers are $\mathrm{Re} = 0.028$ and $\mathrm{Re} = 0.04$, so the flow is clearly laminar.

 ©2012 COMSOL

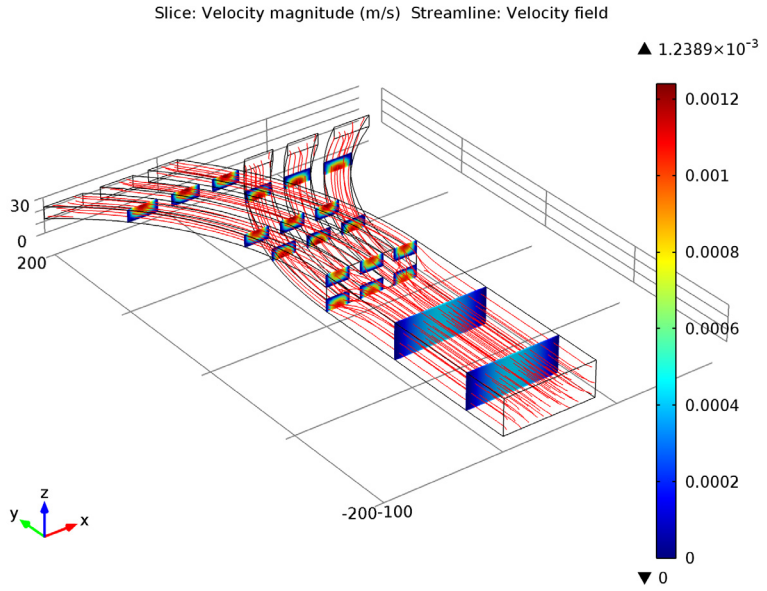

Figure 3: Fluid flow in the lamella mixer.

Figure 4 shows the concentration distribution on the model boundaries. The inflow channels see a constant concentration of 0 or 50 mol/m^3 depending on the channel. Mixing starts when the fluid enters the mixing chamber. At the entrance there is a clear separation of the concentration, but this diminishes toward the end of the chamber. On the sides of the mixing chamber where the flow velocity is smaller the mixing is better than at its center. The mixing, however, is not perfect, and a reduced flow velocity, a longer mixing chamber, or some other means to increase mixing is preferable.

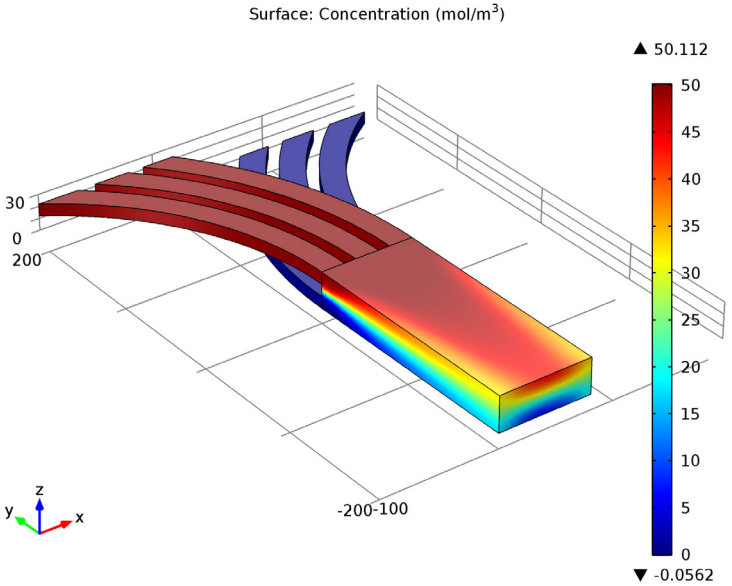

Figure 4: Concentration plot on the boundaries of the lamella mixer model.

To get another point of view, examine Figure 5, which shows the concentration profile at the chamber's centerline. Near the channels the transition is very rapid, but closer to the chamber's end the profile has a flatter sigmoid shape. On the chamber's sides the concentration profile has the same shape, but its amplitude is between approximately 17 mol/m^3 and 33 mol/m^3.

If you generalize the concentration profile to cover the entire component (Figure 1), the profile would be a wave-like curve where concentration would alternate between its minimum and maximum values with a spatial frequency related to the layer thickness.

 ©2012 COMSOL

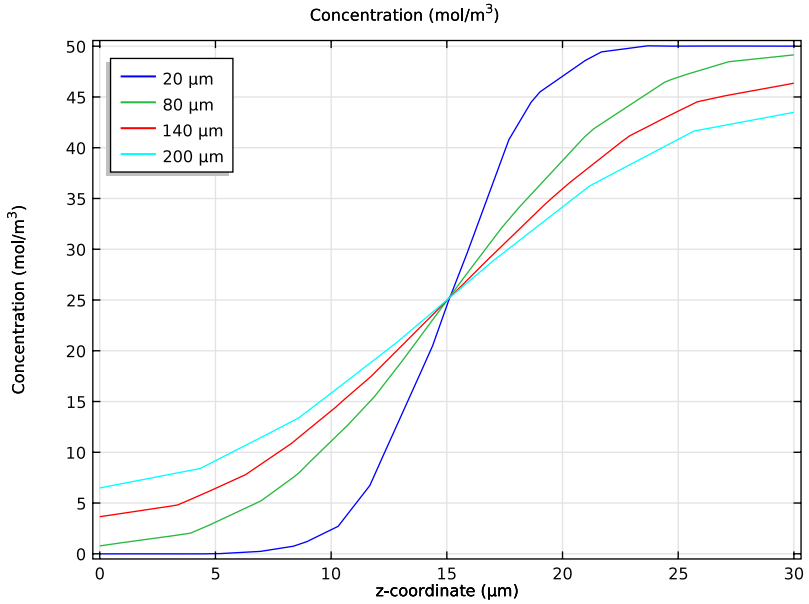

Figure 5: Concentration profile along a line in the z direction in the middle of the mixing chamber at various distances from the microchannels: 20 µm (solid), 80 µm (dotted), 140 µm (dashed), and 200 µm (dash-dotted).

Notes About the COMSOL Implementation

You build the model with two interfaces: The Laminar Flow interface solves for the fluid flow, and the Transport of Diluted Species interface solves for the concentration field in the fluid. For both interfaces use the default values for the equation forms: For the Laminar Flow interface the default value is the full stress tensor formulation in Equation 1; for the Transport of Diluted Species interface the default value is the nonconservative equation form in Equation 2. The selection for the Transport of Diluted Species interface ensures that no artificial accumulation of concentration arises when solving the model.

Because the concentration does not affect the fluid flow, it is not necessary to solve the interfaces simultaneously. By solving them sequentially, starting with the Navier-Stokes equations, you improve the solution's convergence and reduce the solution time. Using this technique it takes only a few minutes to solve this model.

©2012 COMSOL

Model Library path: `Microfluidics_Module/Micromixers/lamella_mixer`

Modeling Instructions

MODEL WIZARD

1 Go to the **Model Wizard** window.

2 Click **Next**.

3 In the **Add physics** tree, select **Fluid Flow>Single-Phase Flow>Laminar Flow (spf)**.

4 Click **Add Selected**.

5 In the **Add physics** tree, select **Chemical Species Transport>Transport of Diluted Species (chds)**.

6 Click **Add Selected**.

7 Click **Next**.

8 Find the **Studies** subsection. In the tree, select **Preset Studies for Selected Physics>Stationary**.

9 Click **Finish**.

GEOMETRY 1

The model geometry is supplied as a COMSOL Multiphysics CAD-file.

Import 1

1 In the **Model Builder** window, under **Model 1** right-click **Geometry 1** and choose **Import**.

2 In the **Import** settings window, locate the **Import** section.

3 Click the **Browse** button.

4 Browse to the model's Model Library folder and double-click the file `lamella_mixer.mphbin`.

5 Click the **Import** button.

The dimensions of this geometry are given in micrometers, so you need to change the length unit accordingly.

6 In the **Model Builder** window, click **Geometry 1**.

7 In the **Geometry** settings window, locate the **Units** section.

 ©2012 COMSOL

8 From the **Length unit** list, choose **µm**.

GLOBAL DEFINITIONS

Parameters

1 In the **Model Builder** window, right-click **Global Definitions** and choose **Parameters**.

2 In the **Parameters** settings window, locate the **Parameters** section.

3 In the table, enter the following settings:

Name	Expression	Description
p0	10[Pa]	Driving pressure
c0	50[mol/m^3]	Input concentration
D_i	1e-10[m^2/s]	Isotropic diffusion coefficient

Next, add a material for the fluid.

MATERIALS

Material Browser

1 In the **Model Builder** window, under **Model 1** right-click **Materials** and choose **Open Material Browser**.

2 In the **Material Browser** window, locate the **Materials** section.

3 In the tree, select **Built-In>Water, liquid**.

4 Right-click and choose **Add Material to Model** from the menu.

You are now ready to set up the physics interfaces.

LAMINAR FLOW

Inlet 1

1 In the **Model Builder** window, under **Model 1** right-click **Laminar Flow** and choose **Inlet**.

2 Select Boundaries 1, 6, 11, 38, 41, and 42 only.

To do this, you can use Ctrl-click to highlight the two segments of the inlet boundary and then right-click to confirm the selection. Alternatively, click the **Paste Selection** button in the **Boundary Selection** section of the **Settings** window and enter the boundary numbers in the dialog box that appears. A third possibility is to copy the text '1, 6, 11, 38, 41, and 42' from this document, click in the **Selection** box, and then press Ctrl+V.

3 In the **Inlet** settings window, locate the **Boundary Condition** section.

4 From the **Boundary condition** list, choose **Pressure, no viscous stress**.

5 Locate the **Pressure, No Viscous Stress** section. In the p_0 edit field, type `p0`.

Symmetry 1

1 In the **Model Builder** window, right-click **Laminar Flow** and choose **Symmetry**.

2 Click the **Wireframe Rendering** button on the Graphics toolbar to see through the geometry.

3 Select Boundaries 4, 9, 14, 17, 18, 21, 29, and 35 only.

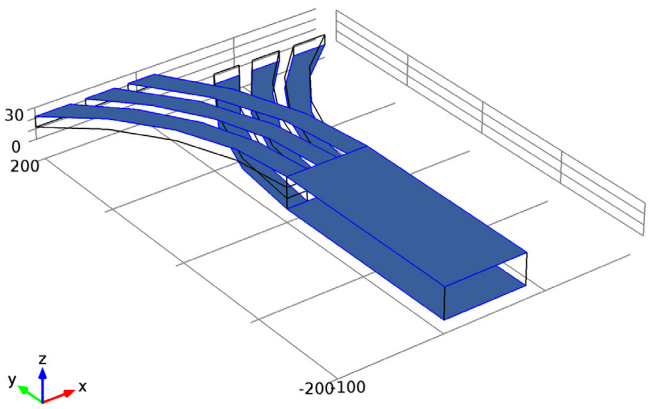

Outlet 1

1 Right-click **Laminar Flow** and choose **Outlet**.

2 Select Boundary 16 only.

TRANSPORT OF DILUTED SPECIES

Convection and Diffusion 1

1 In the **Model Builder** window, expand the **Model 1>Transport of Diluted Species** node, then click **Convection and Diffusion 1**.

2 In the **Convection and Diffusion** settings window, locate the **Model Inputs** section.

3 From the **u** list, choose **Velocity field (spf/fp1)**.

 ©2012 COMSOL

4 Locate the **Diffusion** section. In the D_c edit field, type `D_i`.

Concentration 1

1 In the **Model Builder** window, right-click **Transport of Diluted Species** and choose **Concentration**.

2 Select Boundaries 1, 6, and 11 only.

3 In the **Concentration** settings window, locate the **Concentration** section.

4 Select the **Species c** check box.

5 In the $c_{0,c}$ edit field, type `c0`.

Concentration 2

1 Right-click **Transport of Diluted Species** and choose **Concentration**.

2 Select Boundaries 38, 41, and 42 only.

3 In the **Concentration** settings window, locate the **Concentration** section.

4 Select the **Species c** check box.

Leave the concentration at its default zero value.

Outflow 1

1 Right-click **Transport of Diluted Species** and choose **Outflow**.

2 Select Boundary 16 only.

3 Having defined all the boundary conditions, click the **Wireframe Rendering** button on the Graphics toolbar to return to the default rendering state.

MESH 1

In the **Model Builder** window, under **Model 1** right-click **Mesh 1** and choose **Free Tetrahedral**.

Size

1 In the **Model Builder** window, under **Model 1>Mesh 1** click **Size**.

2 In the **Size** settings window, locate the **Element Size** section.

3 From the **Calibrate for** list, choose **Fluid dynamics**.

4 From the **Predefined** list, choose **Fine**.

5 Click the **Build All** button.

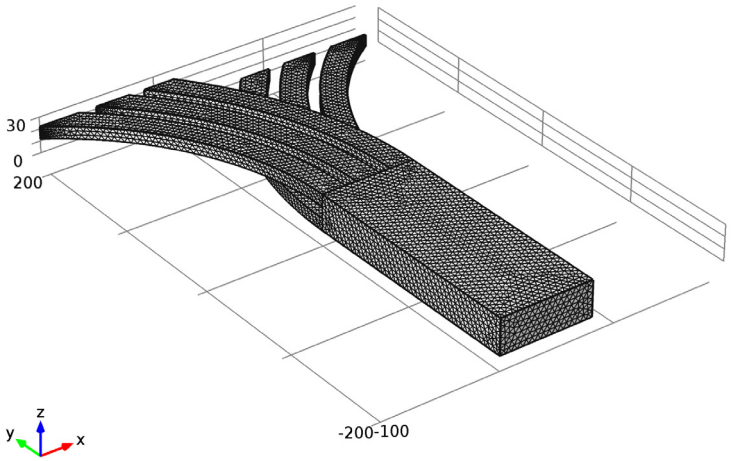

STUDY 1

In the **Model Builder** window, right-click **Study 1** and choose **Compute**.

RESULTS

Data Sets

The following instructions show how to reproduce the plots in the Results and Discussion section.

Velocity (spf)

1 Click the **Zoom Extents** button on the Graphics toolbar.

2 In the **Model Builder** window, expand the **Velocity (spf)** node, then click **Slice 1**.

3 In the **Slice** settings window, locate the **Plane Data** section.

4 From the **Plane** list, choose **zx-planes**.

5 In the **Model Builder** window, right-click **Velocity (spf)** and choose **Streamline**.

6 In the **Streamline** settings window, locate the **Streamline Positioning** section.

7 From the **Positioning** list, choose **Magnitude controlled**.

8 In the **Min distance** edit field, type `0.01`.

9 In the **Max distance** edit field, type `0.025`.

10 Click the **Plot** button.

 ©2012 COMSOL

Compare the result with the plot in Figure 3.

Concentration (chds) 1

The second of the two default concentration plots shows the concentration on the modeling domain's boundary; compare with Figure 4.

Data Sets

To reproduce Figure 5, showing the concentration as a function of z at four different y positions along the mixing chamber, begin by creating four cut-line data sets. The possibility to duplicate model-tree nodes simplifies the procedure considerably.

1. In the **Model Builder** window, under **Results** right-click **Data Sets** and choose **Cut Line 3D**.
2. In the **Cut Line 3D** settings window, locate the **Line Data** section.
3. In row **Point 1**, set **x** to 40.
4. In row **Point 1**, set **y** to -20.
5. In row **Point 2**, set **x** to 40.
6. In row **Point 2**, set **y** to -20.
7. In row **Point 2**, set **z** to 30.
8. Click the **Plot** button.

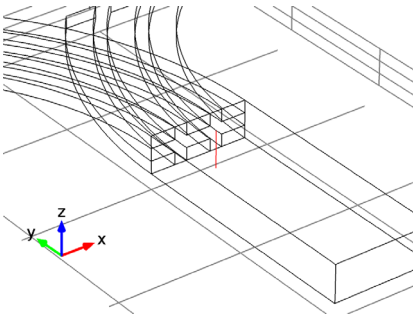

9. Right-click **Results>Data Sets>Cut Line 3D 1** and choose **Duplicate**.
10. In the **Cut Line 3D** settings window, locate the **Line Data** section.
11. In row **Point 1**, set **y** to -80.
12. In row **Point 2**, set **y** to -80.

    Leave the *x* and *z* values unchanged.
13. Right-click **Results>Data Sets>Cut Line 3D 2** and choose **Duplicate**.
14. In the **Cut Line 3D** settings window, locate the **Line Data** section.

15 In row **Point 1**, set **y** to `-140`.

16 In row **Point 2**, set **y** to `-140`.

17 Right-click **Results>Data Sets>Cut Line 3D 3** and choose **Duplicate**.

18 In the **Cut Line 3D** settings window, locate the **Line Data** section.

19 In row **Point 1**, set **y** to `-200`.

20 In row **Point 2**, set **y** to `-200`.

1D Plot Group 5

1 In the **Model Builder** window, right-click **Results** and choose **1D Plot Group**.

2 In the **1D Plot Group** settings window, click to expand the **Legend** section.

3 From the **Position** list, choose **Upper left**.

4 Locate the **Title** section. From the **Title type** list, choose **Manual**.

5 In the **Title** text area, type `Concentration (mol/m<sup>3</sup>)`.

Note the use of HTML tags to get superscript text.

6 Right-click **Results>1D Plot Group 5** and choose **Line Graph**.

7 In the **Line Graph** settings window, locate the **Data** section.

8 From the **Data set** list, choose **Cut Line 3D 1**.

9 Click **Replace Expression** in the upper-right corner of the **y-Axis Data** section. From the menu, choose **Transport of Diluted Species>Species c>Concentration (c)**.

10 Click **Replace Expression** in the upper-right corner of the **x-Axis Data** section. From the menu, choose **Geometry and Mesh>Coordinate>z-coordinate (z)**.

11 Click to expand the **Legends** section. Select the **Show legends** check box.

12 From the **Legends** list, choose **Manual**.

13 In the table, enter the following settings:

Legends
20 μm

To enter the character 'μ', copy the Unicode character u00b5 from an external tool (such as the Character Map in Windows) and paste into the table.

14 Right-click **Results>1D Plot Group 5>Line Graph 1** and choose **Duplicate**.

15 In the **Line Graph** settings window, locate the **Data** section.

16 From the **Data set** list, choose **Cut Line 3D 2**.

 ©2012 COMSOL

17 Locate the **Legends** section. In the table, enter the following settings:

Legends
80 μm

18 Right-click **Results>1D Plot Group 5>Line Graph 2** and choose **Duplicate**.

19 In the **Line Graph** settings window, locate the **Data** section.

20 From the **Data set** list, choose **Cut Line 3D 3**.

21 Locate the **Legends** section. In the table, enter the following settings:

Legends
140 μm

22 Right-click **Results>1D Plot Group 5>Line Graph 3** and choose **Duplicate**.

23 In the **Line Graph** settings window, locate the **Data** section.

24 From the **Data set** list, choose **Cut Line 3D 4**.

25 Locate the **Legends** section. In the table, enter the following settings:

Legends
200 μm

26 Click the **Plot** button.

Compare the result with Figure 5.

 ©2012 COMSOL